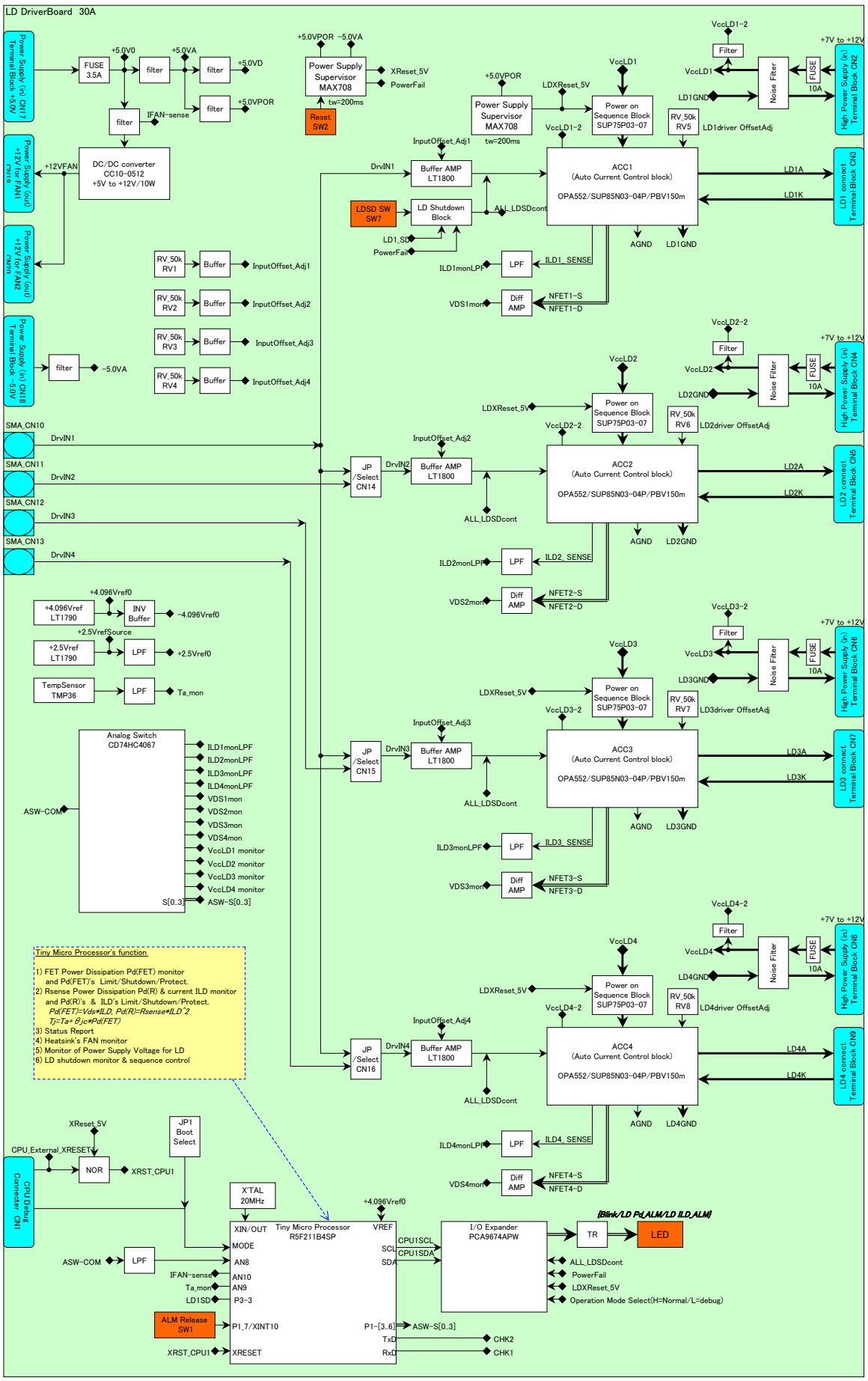
LD DriverBoard 30A
Power Supply (in) CN17 Terminal Block +5.0V
FUSE 3.5A
+5.0V0
filter
+5.0VA
+5.0VD
+5.0VPOR
IFAN-sense
Power Supply (out) +12V for FAN1 CN19
+12VFAN
DC/DC converter CC10-0512 +5V to +12V/10W
Power Supply (out) +12V for FAN2 CN20
Power Supply (in) CN18 Terminal Block -5.0V
-5.0VA
+5.0VPOR -5.0VA
Power Supply Supervisor MAX708
XReset_5V
PowerFail
tw=200ms
Reset SW2
RV_50k RV1
RV_50k RV2
RV_50k RV3
RV_50k RV4
Buffer
InputOffset_Adj1
InputOffset_Adj2
InputOffset_Adj3
InputOffset_Adj4
SMA_CN10
SMA_CN11
SMA_CN12
SMA_CN13
DrvIN1
DrvIN2
DrvIN3
DrvIN4
JP /Select CN14
JP /Select CN15
JP /Select CN16
Buffer AMP LT1800
LDSD SW SW7
LD Shutdown Block
ALL_LDSDcont
LD1_SD
PowerFail
+4.096Vref0
+4.096Vref LT1790
INV Buffer
-4.096Vref0
+2.5VrefSource
+2.5Vref LT1790
LPF
+2.5Vref0
TempSensor TMP36
Ta_mon
Analog Switch CD74HC4067
ASW-COM
ILD1monLPF
ILD2monLPF
ILD3monLPF
ILD4monLPF
VDS1mon
VDS2mon
VDS3mon
VDS4mon
VccLD1 monitor
VccLD2 monitor
VccLD3 monitor
VccLD4 monitor
ASW-S[0..3]
S[0..3]
Tiny Micro Processor's function
1) FET Power Dissipation Pd(FET) monitor and Pd(FET)'s Limit/Shutdown/Protect.
2) Rsense Power Dissipation Pd(R) & current ILD monitor and Pd(R)'s & ILD's Limit/Shutdown/Protect.
Pd(FET)=Vds*ILD, Pd(R)=Rsense*ILD^2
Tj=Ta+θjc*Pd(FET)
3) Status Report
4) Heatsink's FAN monitor
5) Monitor of Power Supply Voltage for LD
6) LD shutdown monitor & sequence control
XReset_5V
CPU_External_XRESET
NOR
XRST_CPU1
JP1 Boot Select
CPU Debug Connector CN1
X'TAL 20MHz
Tiny Micro Processor R5F211B4SP
XIN/OUT
MODE
AN8
AN10
AN9
P3-3
P1_7/XINT10
XRESET
VREF
SCL
SDA
P1-[3..6]
TxD
RxD
ALM Release SW1
IFAN-sense
Ta_mon
LD1SD
CPU1SCL
CPU1SDA
ASW-S[0..3]
CHK2
CHK1
I/O Expander PCA9674APW
TR
LED
[Blink/LD Pd_ALM/LD ILD_ALM]
ALL_LDSDcont
PowerFail
LDXReset_5V
Operation Mode Select(H=Normal/L=debug)
VccLD1
VccLD1-2
Filter
Noise Filter
FUSE
10A
+7V to +12V
High Power Supply (in) Terminal Block CN2
LD1GND
RV_50k RV5
LD1driver OffsetAdj
Power on Sequence Block SUP75P03-07
ACC1 (Auto Current Control block) OPA552/SUP85N03-04P/PBV150m
LD1A
LD1K
LD1 connect Terminal Block CN3
AGND
ILD1_SENSE
Diff AMP
NFET1-S
NFET1-D
VccLD2
VccLD2-2
LD2GND
RV_50k RV6
LD2driver OffsetAdj
High Power Supply (in) Terminal Block CN4
ACC2 (Auto Current Control block) OPA552/SUP85N03-04P/PBV150m
LD2A
LD2K
LD2 connect Terminal Block CN5
ILD2_SENSE
NFET2-S
NFET2-D
VccLD3
VccLD3-2
LD3GND
RV_50k RV7
LD3driver OffsetAdj
High Power Supply (in) Terminal Block CN6
ACC3 (Auto Current Control block) OPA552/SUP85N03-04P/PBV150m
LD3A
LD3K
LD3 connect Terminal Block CN7
ILD3_SENSE
NFET3-S
NFET3-D
VccLD4
VccLD4-2
LD4GND
RV_50k RV8
LD4driver OffsetAdj
High Power Supply (in) Terminal Block CN8
ACC4 (Auto Current Control block) OPA552/SUP85N03-04P/PBV150m
LD4A
LD4K
LD4 connect Terminal Block CN9
ILD4_SENSE
NFET4-S
NFET4-D